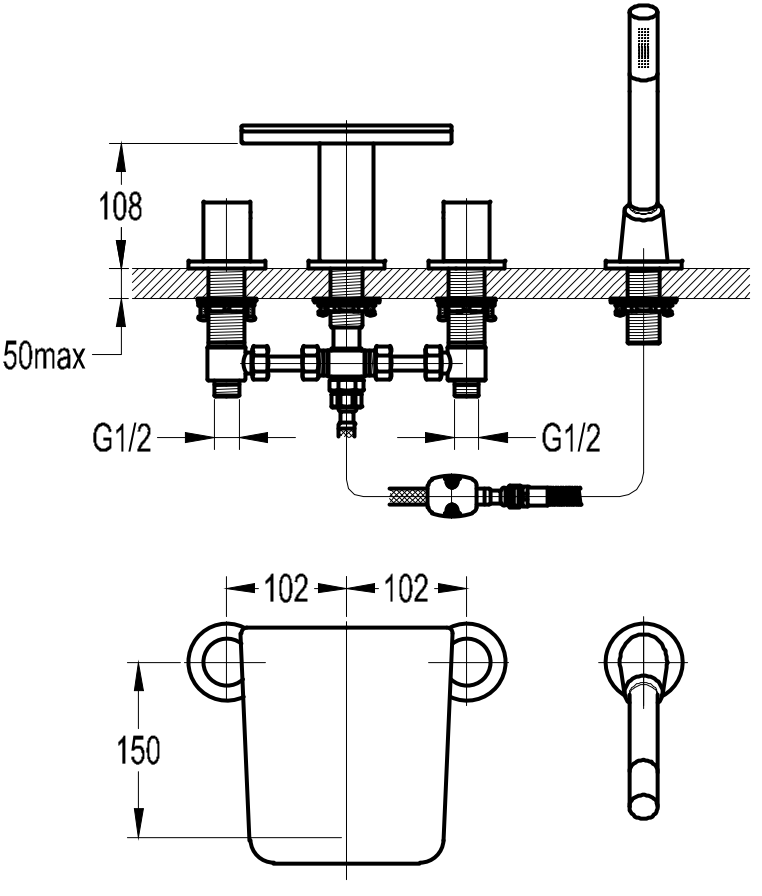
108
50max
G1/2
G1/2
102
102
150